:

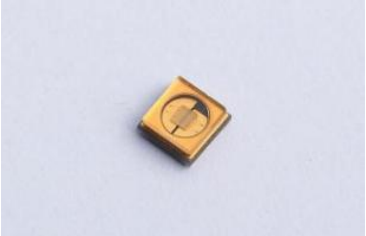

-
-
-
-
-

0.20

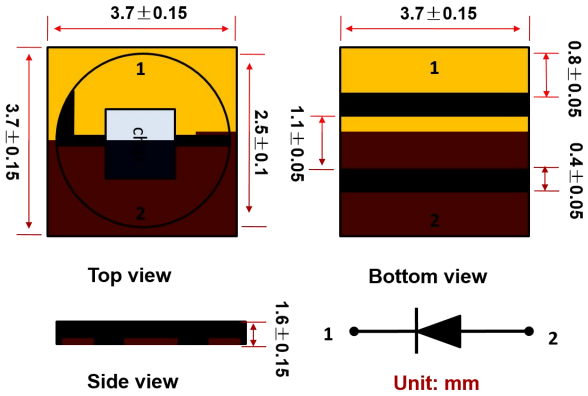
3.7±0.15
3.7±0.15
1
1
3.7±0.15
2.5±0.1
1.1±0.05
0.8±0.05
0.4±0.05
2
2
Top view
Bottom view
1.6±0.15
1
2
Side view
Unit: mm

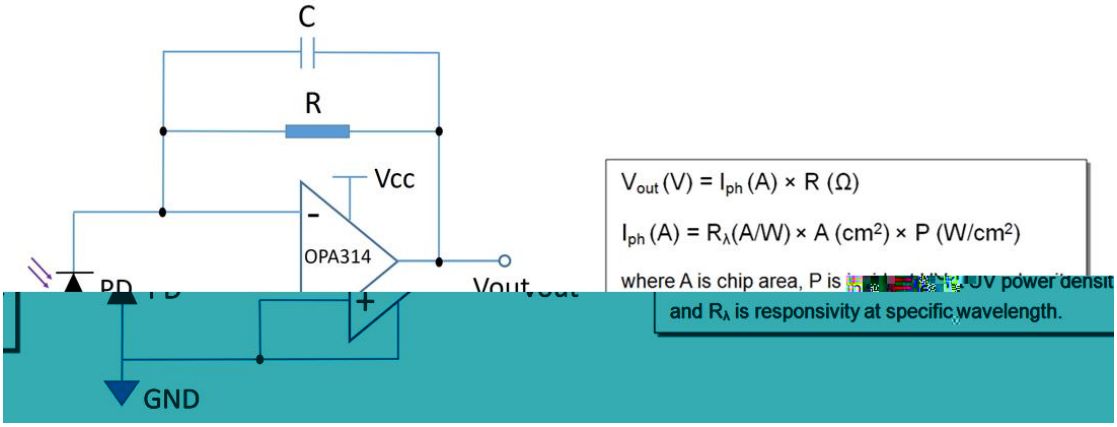
C
R
Vcc
OPA314
Vout
GND
V_{out} (V) = I_{ph} (A) × R (Ω)
I_{ph} (A) = R_λ(A/W) × A (cm²) × P (W/cm²)
where A is chip area, P is
and R_λ is responsivity at specific wavelength.

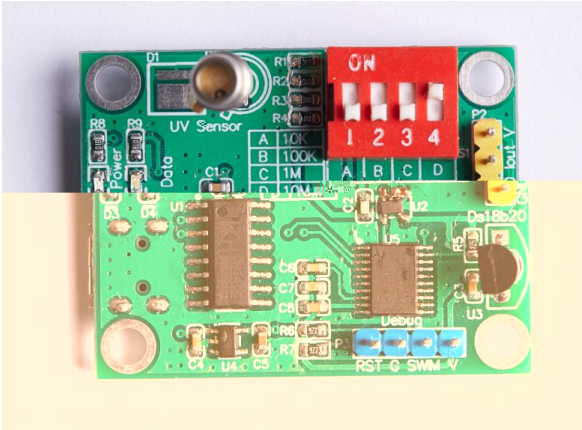
ON
1 2 3 4
UV Sensor